Model: T1801

Best Master Furniture
The Imported Furniture Specialist

Please check whether all parts are available, then assemble by illustration .

PARTS LIST

1:Leg.....4PCS
2:Allen Boits.....8PCS
3:Flat Washers.....8PCS
4:Sprinh Washers.....8PCS
5:Allen Wrench.....1PC

NO.	Description	QTY
1		4 PCS
2		8 PCD
3		8 PCD
4		8 PCD

ASSEMBLY PROCEDURE

VERY IMPORTANT:Please install the legs by the alphabet designated on each.
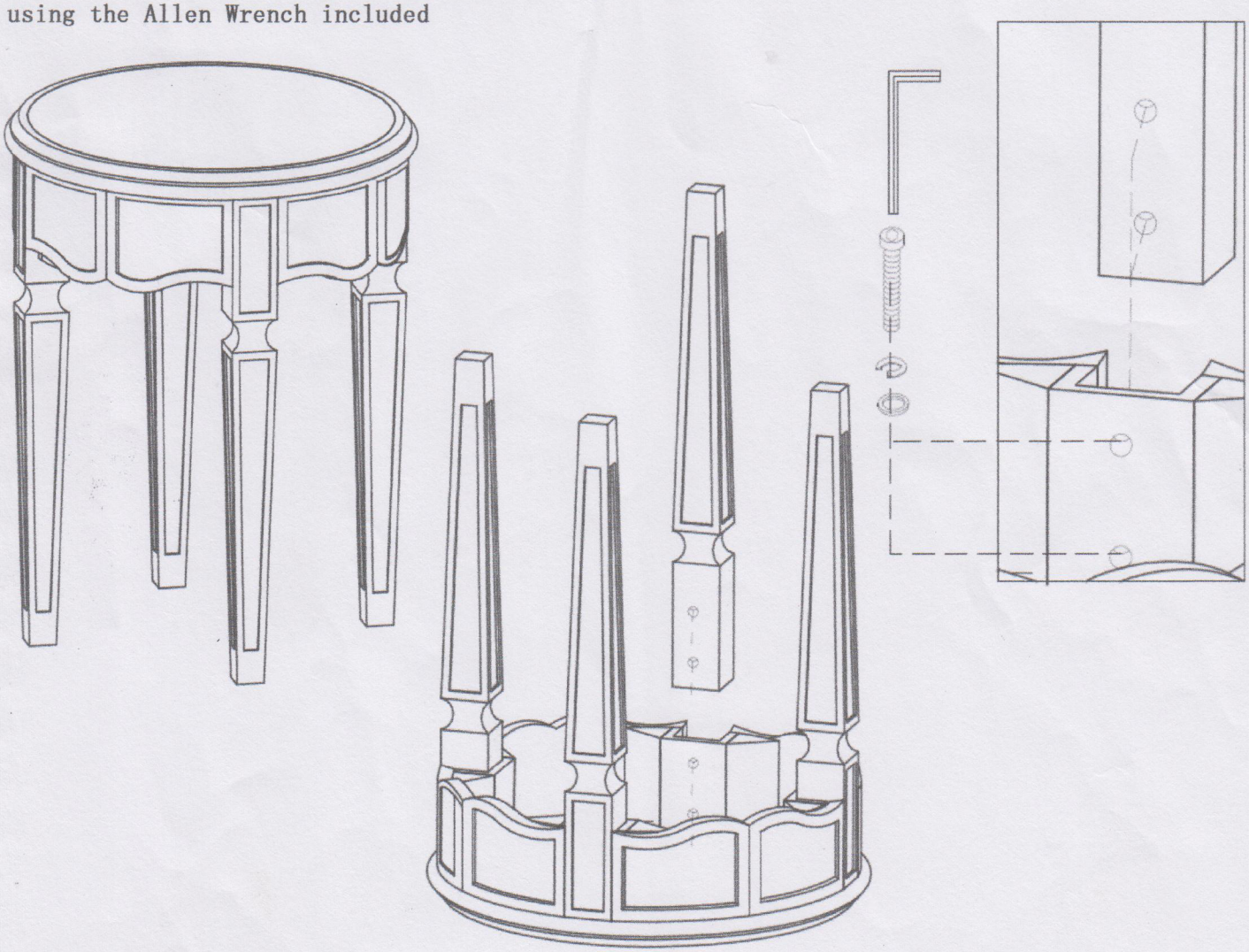
1:Place the mirrored Chest upside down on a soft surface.
2:Affix the Legs by aligning pre-drilled holes under with pre-threaded holes in legs
3:Secure each leg by tightening Allen Bolts,Lock Washers and Flat Washers using the Allen Wrench included